SYCAMORE

Installation instructions : **New Sirius Connect LED Cabinet Light Recessed/Surface SY9566/SY9567**

Thank you for purchasing this SycamoreLED.com product. Please make sure instructions are followed carefully prior to and during installation and product is not altered, otherwise warranty may not be valid. For technical support or warranty information please visit www.sycamoreLED.com, or call our dedicated technical helpline +44 (0) 113 2866686.

IMPORTANT—Please read prior to installation

1) Please read these instructions carefully before commencing any work
2) It is strongly recommended that this unit is installed by a qualified electrician
3) To prevent electrocution switch the power off at the mains supply before installing or maintaining this fitting
4) Ensure others cannot restore the electrical supply without your knowledge
5) The PSU must be rated 12VDC and be compatible with the pre-wired connector system of this product
6) Never exceed the wattage stated

DIAGRAMS

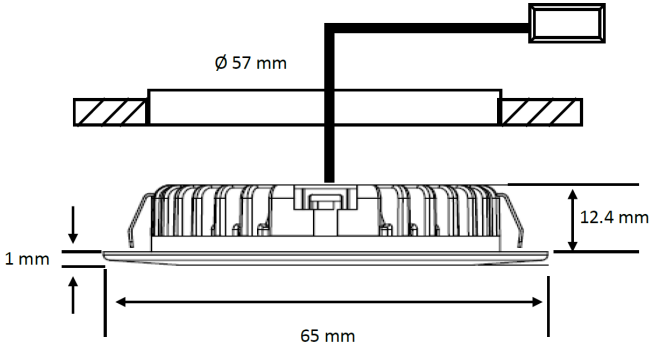

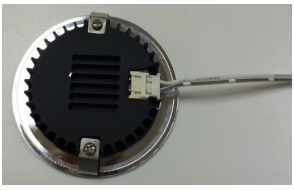

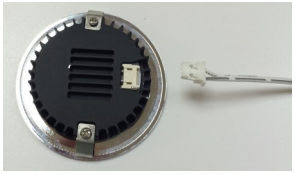

INSTALLATION

RECESSED

1) Suitable for installation into blind hole
2) Cut 57mm hole in suitable surface
3) Route cable in desired location, ensuring that the plug of the light can be connected to the driver (PSU) 12Vdc
4) Connect into rear of light fitting and PSU
5) Insert light in recess
6) Check operation of light

SURFACE

1) Fix surface ring in position using screws provided
2) Ensure that cable is located via cut out on spacer
3) Connect into rear of light fitting and into PSU
4) Insert light into spacer and check operation

CARE IN USE

1) Please note this fitting has non replaceable parts
2) Always switch off or disconnect from the mains when cleaning the product.
3) We recommend cleaning with a soft dry cloth. Do not use scourers, abrasives or chemical cleaners

This product contains a light source of energy efficiency class F

EnabLED Licensing Program for LED Luminaires and Retrofit Bulbs
Member
Sycamore Lighting Limited

SycamoreLED.com
LS25 2DY
Technical helpline : 0113 2866686
***Please email sales@sycamoreled.com to register your product**

RATING IP44